Finding Safe Haven in Hydrogen and Fuel Cell Systems (Part 1)

By Vicki P. McConnell,
Editor - Fuel Cell Industry Report
(www.FCellReport.com)

To create a worldwide hydrogen (H2) economy with fuel cells providing clean, safe electrical energy, end users will have to embrace this energy carrier. That means using it onboard their vehicles, at fueling stations in their neighbourhoods, in their electronic devices such as cell phones and laptop computers as well as in stationary installations providing electricity for homes and businesses. H2-powered fuel cells that provide backup power for hospitals, banks, and telecommunications during grid "brown outs" or "black outs" have endeared the public to this new technology in the short term. However, despite field tests to establish proof of performance with customers, and industry efforts to establish fuel cells as a viable method of power production in the long term, there remains a lingering question. This question relates to the safety of H2 and the fuel cell systems that rely on it as a key element in the electrochemical reaction.

Whether based in fact or fiction, this "hydrogen fear factor" -- and the connection of H2 with fuel cells -- must be put into perspective. Most of the mythology regarding H2's explosive and flammability potential stems from association of it as the cause of the Hindenburg airship loss in 1937, or with the hydrogen bomb. One theory that disputes H2 as the culprit in the Hindenburg crash in New Jersey, USA was published in 1997 by Addison Bain, former NASA engineer. Bain's three-part examination of the zeppelin incident suggests ignition of highly-flammable skin covering the airship as a result of static electricity, not from a leak in the H2 tank (1). Further, the color of the fire was not characteristic of H2, and the airship did not explode but rather burned in omnidirectional patterns. The National Hydrogen Association (NHA in Washington, D.C., USA), backs up Bain's findings **(2).**

As for the connection to the hydrogen bomb, NHA explains that the rare H2 isotope, tritium, plus extreme heat from nuclear fission are necessary to induce the nuclear fusion reaction of a H2 bomb. "This technology bears no resemblance to the simple chemical reactions associated with the H2 isotope, protium, used in H2 production, storage, distribution and the H2 economy," states the organisation's "Hydrogen Safety" fact sheet **(3).**

Transcending the mythology

So there's no joke, or accuracy, in references to fuel cell installations or fuel cell vehicles (FCVs) as "little Hindenburgs"; original equipment manufacturers (OEMs) are keenly aware that H2 must be proven as a safe fuel on par with proving reliability, longevity, ease of maintenance, and low cost in commercial fuel cell products. To that end, emphasis on safety is part and parcel of evolving fuel cell system designs from OEMs, along with intensive system testing. Likewise, safety is central to efforts by fuel cell

industry organisations, codes and standards bodies, and world governments (though this report focuses primarily on efforts in the United States).

Every element of a fuel cell system will have its own safety assessment prior to widespread commercialisation. For the purposes of this report, a fuel cell system encompasses these elements:

- The stack (supplying primary power, made from graphite, ceramic, metal, or composite and containing the catalyst that begins the electrochemical reaction between H2 and oxygen needed in every fuel cell)
- Balance of plant (BOP, comprised of auxiliary components that may include a heat exchanger, pumps, fans and blowers, motors and compressors, humidification and water management components, controllers, inverters and converters, filters, valves, piping, flow meters, seals and gaskets and more)
- Fuel processor or reformer (when using methods such as steam, autothermal or partial oxidation to extract H2 from a feedstock fuel other than H2)
- Fuel storage (such as variously-sized high pressure or cryogenic tanks, or solid storage forms such as hydrides) on vehicles or at stationary locations, and small, replaceable pressurised or nonpressurised cartridges in portable devices)
- Fuel (H2 in compressed, liquid or solid form; also hydrocarbon reformate fuels such as gasoline, diesel, natural gas, propane, and kerosene from which H2 is derived; synthetic fuels that also produce H2; or on-demand fuels such as sodium borohydride/water that are inert until combined with the aid of a catalyst to create H2).

The basic properties of H2 as an energy carrier can be seen in light of a need for safety in handling it, as well as by the benefits this carrier provides within fuel cell systems. With help from Nation Hydrogen Association's (NHA) "Hydrogen Safety Facts," these basic properties include:

* H2 is lighter than air and diffuses rapidly. It's diffusivity rate is 3.8 times faster than natural gas, so it dilutes quickly into a nonflammable concentration. OEMs take containment into account in design of enclosures where fuel cells operate with H2 to allow it to escape up and away from the equipment and personnel working near it. According to The Regulators' Guide to Permitting Hydrogen Technologies, published in 2004 by the US Department of Energy (DOE), "Hydrogen's rapid dispersion rate is its greatest safety asset." (See www.pnl/gov/fuelcells/permit_guide.stm.)

* H2 is odorless, colorless and tasteless. So is natural gas, but it can be odorised, whereas odorising H2 is undesirable for several reasons. Firstly, there are not known odorants that track with H2. H2's small molecular size and high diffusivity mean that is disspates so quickly as to leave the odorant behind. In addition, mercaptan odorants tested to date cause irreparable contamination in fuel cells. Fortunately, there are more advanced methods of leak detection that are suitable for H2. A major advantage of sensors is that they work even when there is no human nose around. Hence the importance of H2 sensors for leak detection in fuel cell systems.

A drawback to the colorless nature of H2 is that it can ignite without showing a flame and do damage before the ignition is recognised. Again, the high dissipation rate in air allows ignited H2 to extinguish faster than gasoline fires (see reference section, Michael Swain's University of Miami comparative burn test). Stephen Ellis, Manager of Fuel Cell Vehicles, Sales and Marketing for American Honda Motor Company, makes the point that after ignition, a steady supply of H2 is required to sustain a flame. This would not occur, he says, with electronic, in-tank, normally closed shutoff valves in compressed H2 tanks.

* H2 flames have low radiant heat. Though the flame is hot, only low levels of heat surround the flame, which can reduce the risk of secondary fires.

* H2 can combust, with the presence of an ignition source, but the right amount of oxidiser (such as oxygen) must also be present.

* H2 has a wide flammability range (4 to 74% in air), and the energy required to ignite it (0.02 mJ) can be low. However, at low concentrations (below 10%), this ignition energy requirement is much higher, similar to the energy required to ignite natural gas or gasoline in their respective flammability ranges. This makes H2 more difficult to ignite near the lower flammability limit.

Figure 1. Fuel comparisons for flammability, ignition and explosion properties

	Hydrogen	Gasoline Vapor	Natural Gas
Flammability Limits (in air)	4-74%	1.4-7.6%	5.3-15%
Explosion Limits (in air)	18.3-59.0%	1.1-3.3%	5.7-14%
Ignition Energy (mJ)	0.02	0.20	0.29
Flame Temp. in air (°C)	2045	2197	1875
Stoichiometric Mixture (most easily ignited in air)	29%	2%	9%

Source: Courtesy of National Hydrogen Association's "Hydrogen Safety Fact Sheet"

* H2, just like natural gas, will not "explode" when ignited as a result of putting it under pressure or low temperature (in compressed or cryogenic tanks, for example). It would need to be concentrated to the correct air/fuel ratio. The relative concentration ranges for H2 to be explosive with enough oxidiser present are 18 to 59%, compared to the range for gasoline, which is 1.1 to 3.3%. H2 quickly rises and dissipates, whereas fuels such as gasoline or propane hover near the ground, creating a greater danger for ignition.

* H2 can have an embrittling effect over time on certain materials such as steel, which must be taken into consideration when selecting suitable materials for H2 storage tanks.

* H2, again like any other gas, can cause asphyxiation if the concentration is enough to displace oxygen. Liquid H2 also can cause cryogenic burns, as with any other cryogenic liquid. The key to avoiding these safety issues can be found in designing robust containers with proper venting where required, temperature and pressure monitoring, and redundant safety features. Or as Karen Hall, the NHA's Vice President of Technical Operations, puts it, "It is simply a matter of designing systems with the physical properties of H2 in mind."

* H2 is nontoxic and nonpoisonous. It will not contaminate groundwater, nor contribute to atmospheric pollution. H2 does not create fumes.

Identifying fuel cell system safety concerns

Carl Rivkin, Senior Chemical Engineer with the National Fire Protection Association (based in Quincy, MA, USA), identifies basic safety concerns with fuel cell systems using compressed H2. "The major concerns with H2 are the potential energy of high pressure storage, the ignition of a hydrogen leak, and the electrical energy in the fuel cell system." To which Harry Jones, Senior Research Engineer with Underwriters Laboratory Inc. (UL, in Northbrook, IL, USA) adds, "As with any electrical equipment, both internal and external ignition sources in a fuel cell must be identified."

At UTC Fuel Cells and UTC Power, based in South Windsor, CT, USA, "Safety is the primary concern in the design of fuel cells, or any of our products," states Glenn Scheffler, Manager of General Engineering for this OEM that has produced alkaline (AFC), phosphoric acid (PAFC) and proton exchange membrane fuel cells (PEMFC) since it began fuel cell research for the USA's space programme in 1958. He agrees with UL's Jones that, "generally speaking, the hazards of a fuel cell power plant are no different than any other power generator. Hydrogen, like any other fuel, can burn or explode if improperly managed or controlled, and there is an electrical shock hazard if power outputs are not properly insulated and grounded to prevent exposure to high-voltage circuits."

UTC's answer to these safety issues includes meeting established product standards (see "Engineering the risks with codes and standards" section, Part 2 of this report) and other regulatory requirements. In addition, the company performs both hazard and operability (HAZOP) studies and Failure Mode and Effect Analyses (FMEAs) during the design and development process. This ensures that potential hazards are recognised and appropriately managed with regard to personnel safety and adverse impact on the environment. Further, Scheffler reports, "Product manuals and other documentation inform purchasers and potential customers of measures required to safely operate these products." (4)

A safety scheme in the design of the trademarked GenSys, GenCore and GenSite fuel cell and natural gas fuel processor products from Plug Power, an OEM based in Latham, NY, USA, "eliminates ignition sources or the possibility of hydrogen accumulation," says

George Earle, Director of Government Relations. "We also have sensors built into our products to determine if any flammable mixtures occur. We have no arcing or sparking components, and our designs include appropriate venting as well as automatic shut-off valves. Since the GenSys 5C [a 5kW PEMFC] was our first product to market, we were especially conservative with its design. Based on what we've learned in field demonstrations with this product, we may not need all the lines of defense regarding safety that were engineered into that initial system."

He adds that "The general presumption five years ago was that stacks leak. After making hundreds of GenSys 5C units that have been leak tested at original manufacture as well as after thousands of hours in field demonstrations, we have found that the leak rate is negligible. And even if a crossover leak were to develop, in a membrane electrode assembly (MEA) for example, the flow of H2 is insufficient in the stack to present the danger of explosion or fire." **(5)**

In alkaline fuel cells (AFCs), "The key safety points involve the alkaline electrolyte and the hydrogen supply," states Dr. Karl Kordesch, now the principal Research Director for Apollo Energy Systems (AES), an OEM of AFCs based in Pompano Beach, FL, USA. Kordesch worked on AFC technology at Union Carbide Corporation from the 1960's, participating in US Army, Navy, and NASA projects, and in contracts with General Motors and Ford. He built the first H2/air fuel cell operated "City Car" as a battery hybrid version of an Austin A-40, which was in public use for three years and licensed in Ohio. After 1977, he joined the Technical University of Graz, Austria and worked in Europe on the Hermes program of the European Space Agency, together with Siemens and Elenco (later ZeTek Power, now a subsidiary of Cenergie Corp.).

Kordesch points out that alkaline electrolytes (such as potassium hydroxide, KOH, and sodium hydroxide, NaOH) have been used for decades in consumer batteries and large industrial electrolysis units. "The primary danger with the electrolytes occurs if they are splashed into the eyes. Immediate wash with a water/boric acid solution is required. Spilled caustic solutions on the ground should also be washed away as soon as possible, although even a strong alkaline solution will carbonise with carbon dioxide in the air and become neutralised within hours. This is different from sulphuric acid, which stays corrosive permanently and must be removed or specially neutralised."

According to Kordesch, the Apollo Energy Systems' (AES) AFCs operate in a typical temperature regime of 70 to 90°C, with a circulating alkaline electrolyte that also serves as a heat and water management system. The operation is essentially at atmospheric pressure of H2 gas and air. No storage vessels for liquid H2 or high pressure tanks for compressed H2 are needed. "The key to the system is this," he explains, "H2 is produced as needed, on demand by an ammonia cracker system. Important for this fuel cell set up that avoids any large amount of H2 in storage or transportation is also the operation of the AES AFC as a hybrid with a rechargeable battery in parallel. Such a configuration takes care of peak performance requirements and some starting delays relative to shut down and restarting."

The ammonia cracker design, which AES has in patent application, operates extremely efficiently at temperatures that make it possible to design it from low cost, steel components. This device breaks the ammonia feedstock into H2 and nitrogen without the need for a cleaning step, so as to feed the H2 directly into the fuel cell.

Figure 2. Combination of an AFC system and Ammonia Cracker

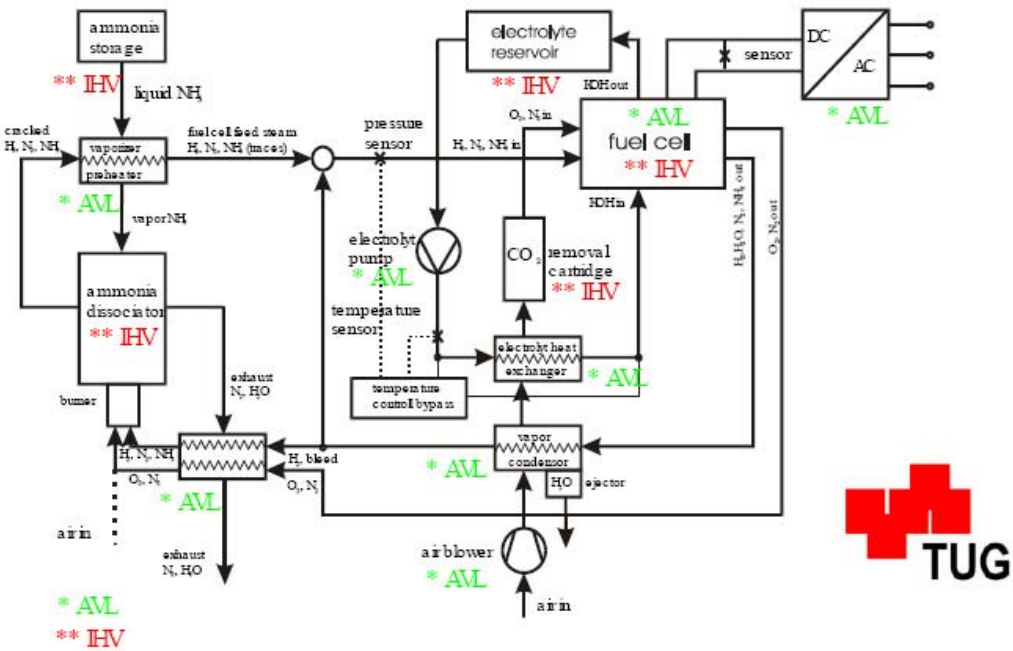

Source: "A Survey of Fuel Cell Systems with Circulating Electrolytes", Courtesy of Apollo Energy Systems; cracker design by High Voltage Institute, TU-Graz)

"Ammonia does not explode," contends Robert Aronsson, President of AES, "and dissipates into the atmosphere without danger to humans or the environment except for a pungent, acrid smell that offers another benefit of easy detection of its presence." It should be noted that the H2 released by the ammonia cracker, however, is odorless.

Automatic safety shut offs are part of virtually every fuel cell system now in testing, including the AES AFCs. Kordesch states, "The potential for damage resulting from H2 leaking from any area of our fuel cells is actually less probable than the H2 explosions possible from lead battery malfunctions in present automobiles." He points out that the ammonia cracker has separate safety controls from the AFC, and if needed, a reserve H2 adsorption device can be added for an automotive system (such as a metal hydride container). **(5a)**

"We believe fuel cells will end up being much safer than internal combustion engines," concludes Michael Rosenberg, Treasurer of Ballard Power Systems, manufacturers of PEMFCs, and based in Burnaby, British Columbia. "Hydrogen is a safer energy carrier

than other existing fuels, and the summer 2004 fire here during a bulk hydrogen delivery proves that point." He is referring to an incident on August 6 at Ballard's manufacturing plant, when a H2 leak in the tank aboard the Praxair delivery truck caught fire. A manual shut off valve was used to extinguish the leak. There was no damage to any of Ballard's facilities or equipment, though the Praxair truck driver did suffer minor burns to his hands and face.

Rosenberg reports that the truck remained operable, and returned to Praxair for inspection. The H2 neither exploded, nor did the entire delivery package burn. In fact, Rosenberg tells Fuel Cell Today that "we got a call from Praxair asking if we wanted the remaining H2 in the truck." In this case, Ballard's emergency response personnel reacted as trained, the safety systems operated as designed, and local fire crews were able to manage the H2 fuel safely and effectively. "If the fuel had been gasoline or propane, the minor injury to the driver and overall damage from this fire would have been much more severe," Rosenberg believes.

Ballard designs and manufactures PEMFC stacks that are then integrated into complete fuel cell systems. "So our stack is equivalent to an engine block in an internal combustion engine," Rosenberg says. "Nothing is going to happen with the stack or the engine block unless there is fuel flowing through it. If a pinhole in an MEA creates a H2 leak in one of our fuel cell stacks, it would create a hot spot that would be indicated through H2 sensors, and replaced or repaired. In our view, the possibility of spontaneous combustion in a fuel cell system is rare. Further, in terms of a vehicle fuel cell system, engine compartments are not air tight, so a H2 leak could dissipate into the air." **(6)**

High temperature doesn't equal combustibility

It might make sense to have greater concern about the safety of fuel cells when they are operating at temperatures ranging from 370 to 650 °C. This is the case with solid oxide and molten carbonate fuel cells (SOFC, MCFC). Yet the manufacturers of these fuel cell systems want to offer a correct perspective on high-temperature fuel cell operations.

Paul Oei, Vice President of Service for FuelCell Energy (FCE), headquartered in Danbury, CT, USA explains that "high temperature operation and combustion are not the same thing. Our Direct Fuel Cell product [based on molten carbonate technology and used entirely in stationary applications] has no external reformer, and the 'molten' aspect of the technology refers to the high-temperature operation at around 650 °C. The chemical reaction chain is so fast [on the order of milliseconds] that no hydrogen gas stream exists as in other fuel cell systems. Our catalyst creates the first extraction of hydrogen, and the electrolyte causes the chemical reaction that operates the fuel cell. This is a no-combustion product, which is as safe or safer than existing products that have combustion elements." Such an existing product would be an industrial heat-treating furnace.

FCE's Direct Fuel Cell stack -- made from ceramic with metal interconnects -- is enclosed in an insulated, high-grade steel vessel and integrated with all the requisite

balance of plant (BOP) components. Oei points out that "all our BOP elements are certified by both Underwriters Laboratory (UL) and the Canadian Standards Association International (CSA). Likewise, the vessel is certified to relevant safety codes and standards for pressure vessels. Like any piece of energy generating equipment, one must take the proper precautions." In Oei's view, handling the natural gas feedstock is more relevant from a safety standpoint than the H2 created in the electrochemical reaction of the fuel cell.

Figure 3. FCE's building block approach to a full-size stack

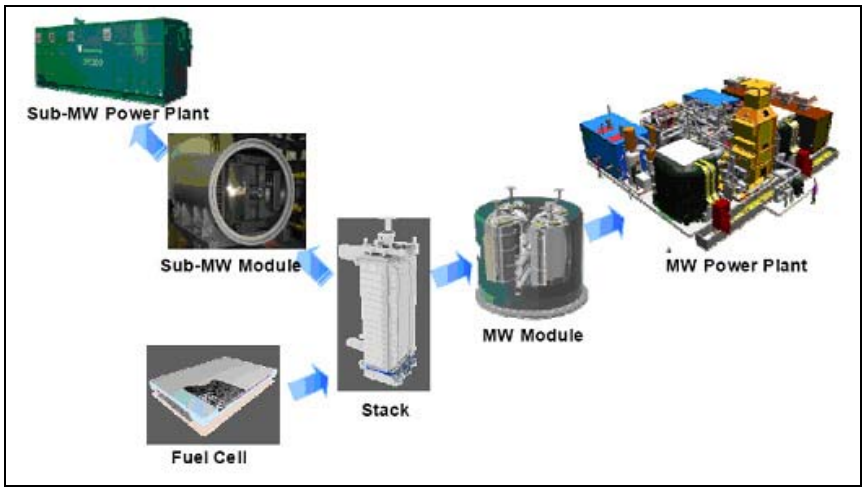

Source: Courtesy of FuelCell Energy

"Natural gas handling is well known," Oei says. To that end, FCE takes care in its selection of connection equipment between the natural gas fuel source and the Direct Fuel Cell stack in the steel vessel. He adds that "most people don't believe there is a fuel cell that doesn't use pure H2 to operate, but that's not true. Our DFC operates on a variety of readily available hydrocarbon fuels -- natural gas, propane, wastewater treatment gas, to name a few -- all with established codes and standards for safe operation and handling." **(7)**

The leading manufacturer of tubular SOFCs (which use ceramics with metal interconnects between cells in the stack) is Siemens Westinghouse Power, based in Churchill, PA, USA. The OEM has been conducting R&D in this technology since the mid-1980s. Larry Shockling, Manager of Stationary Fuel Cell Analysis and Testing, reports that natural gas and other hydrocarbon fuels are the primary fuel feedstocks for Siemens' SOFCs, which are positioned for primary application in the distributed generation market.

"Our operating procedures require us to raise the fuel cell stack to the H2 combustion temperature, or about 600°C, before we introduce our fuel. So any H2 present in the system, such as a minimal amount used as purge gas, is eliminated. This makes our

SOFC a noncombustible, nonexplosive energy-generating system that operates at near atmospheric pressure." He adds that Siemens has a long history in developing SOFCs, "on a step by step basis, from 400 W units to much larger units today. We have conducted internal safety reviews throughout this process and engaged third party certification. We have also hardwired safety stops and control systems, and extensive fuel sensor monitoring." **(8)**

Another SOFC company is McDermott Technology, an OEM based in Alliance, OH, USA and manufacturing planar SOFCs and fuel processors. The company's subsidiary, SOFCo., has been selected as a subcontractor to Cummins Power Generation to help design and test a compact reformer for a 5-kW SOFC-powered auxiliary power unit (APU). The reformer converts H2 from natural gas, and the development effort is part of the US DOE's Solid State Energy Conversion Alliance (SECA) program.

Greg Rush, Systems Manager for SOFCo, relays that "the handling and safety issues for this small SOFC are no different than using natural gas in home appliances and barbecues. Our reformer utilises all-welded ceramic construction and moves the natural gas directly into a designed hot zone in the stack, with no external plumbing. Were the SOFC to crack, any H2 would burn off immediately since we're operating at 700° C. At this temperature, H2 accumulation would be extremely difficult, and certainly not enough to explode." **(9)**

Safety benefits of H2 on demand

There are fuel cell systems that do not utilise onboard or onsite storage of gaseous H2 as the primary fuel, and this can add to operational safety. The H2 and oxygen reactants are literally mixed at the last moment, thereby minimising H2 accumulation. The way this can be accomplished is through use of an integrated fuel reformer such as the FPM 20 fuel processor from IdaTech, an OEM based in Bend, OR, USA. "Fuel cell systems using an integrated fuel reformer offer much greater safety with respect to H2," explains David Edlund, Chief Technology Officer. IdaTech has extensive design and manufacturing experience of complete fuel cell systems (stack, reformer, purification, etc.) that has provided them with a solid understanding of the safety considerations involved.

"The H2 is produced as needed," Edlund explains, "and there is very little inventory of H2 in the system at any moment, which minimises the safety risk. The only fire safety concern for fuel processors is the inherent risk due to the type of fuel being reformed (natural gas, propane, diesel, kerosene, methanol, and others). Obviously, any fire safety risk due to these conventional fuels will also be present with engine-driven generators."

He goes on to say that IdaTech performs HAZOP studies and FMEAs on all its systems. Both are used to determine potential hazards and the means to mitigate them. "Ultimately, safety is ensured by using sound engineering practice in the design of systems, along with proper specification of components. If necessary, additional in-house testing is performed on the component level, the subsystem and system levels. Another way to ensure safety is through third party certification." The latest fuel cell systems

being developed by IdaTech include its CE certified, natural gas/propane fueled EtaGen5, a combined heat and power PEMFC system; a portable power fuel cell system with onboard reforming of fuels, and backup power systems that can use bottled H2 directly. **(10)**

Hydrogen on Demand (HOD) fuel systems also refer to the trademarked process to safely store, generate and deliver pure H2 as developed by Millennium Cell, based in Eatontown, NJ, USA. Founded in 1998, Millennium's process uses the environmentally-friendly raw material, sodium borohydride (a derivative of borax), and water in the presence of a catalyst to create H2. The derivative fuel can be stored in unpressurised plastic containers at ambient temperature.

Besides its environmentally benign nature, the HOD system uses an exothermic reaction to access the H2. This eliminates the need for an external heat source. Further, this nonflammable, noncombustible aqueous solution is carbon and sulphur free and easily controllable. H2 is only produced when the liquid fuel is in direct contact with the catalyst, minimising the amount of gaseous H2 onboard a vehicle at any given time. Also, the residual borates from the reaction have the potential to be recycled into a new source of sodium borohydride.

DaimlerChrysler integrated Millennium Cell's HOD system into a Town and Country minivan in 2001, which the automaker dubbed the Natrium. At the Natrium's unveiling, Thomas Moore, Vice President of DaimlerChrysler's Liberty & Technical Affairs R&D group stated "This fuel system is energy dense, safe to store and use, generates pure hydrogen, and can be recycled." Rex Luzader, Millennium Cell Vice President of Sales and Marketing, added then that "the Hydrogen on Demand system is a simple yet elegant solution, unparalleled for safely carrying and storing H2. The Natrium demonstrates that this is a technology that can be used today in vehicles indistinguishable in comfort and efficiency from those already in production."

Follow-on R&D between DaimlerChrysler and Millennium Cell with the HOD technology has continued since the Natrium's debut, and Millennium Cell also has another system concept in testing with automaker PSA Peugeot Citroen. The French company is conducting a multiphase program studying both onboard and offboard implications of utilising HOD fuel technology. Factors being considered include the forming of the "fuel," the method of fueling, and the method of borate removal. Jean Pierre Goedgebuer, Peugeot's Scientific Director, comments that "the work done on the two first systems that have been evaluated has confirmed an attractive potential for automotive application in terms of safety and range."

Figure 4. "Hydrogen on Demand Typical System Schematic"

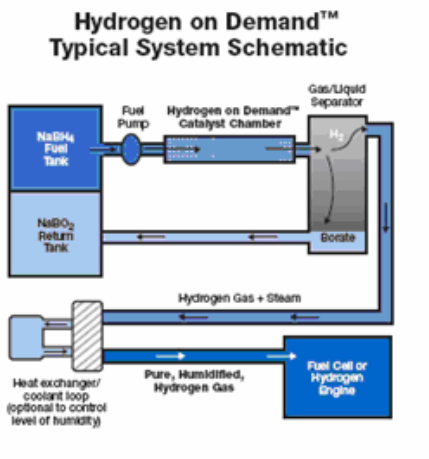

Source: Courtesy of Millennium Cell

Ford Motor Co. has evaluated the HOD system, as have Ballard Power Systems, Oak Ridge National Laboratory, Protonex Technology Corporation, Duffy Electric Boats, Samsung, the U.S. Departments of Energy and Defense (Air Force, Army, Navy) and Icelandic New Energy for a variety of applications and power ranges, including portable power supplies. **(11)**

For Safe Hydrogen of Lexington, MA, USA, one might say, "the safety's in the slurry." Sigmar Tullman, CEO, states that the company's magnesium hydride mixed with water creates H2 via both elements in this unique slurry soup. "That's why it's so efficient," he comments, adding that H2 is created only as needed through Safe Hydrogen's compact mixing device. Depleted slurry yields environmentally benign by products that can be recycled into fresh H2-dense slurry.

One unit of slurry can generate twice the volume of H2 as one unit of cryogenically cooled liquid H2 and ten times the amount of compressed H2 gas. Stored at ambient temperature and pressure, this slurry suffers none of the boil off issues one sees with liquid or compressed H2. Tullmann also states that the slurry is nonexplosive and noncorrosive. He believes this stable, low risk H2 generation system could be applicable onboard vehicles (using fuel cells or internal combustion engines) as well as at refueling stations. Since plastic tanks can be used to contain the slurry, they could be custom formed to fit the architecture of a vehicle's chassis, rather than the multiples of compressed H2 tanks being used now in many FCV prototype test vehicles. **(12)**

Complex safety issues with vehicles

Though FCVs represent one of the potential high volume markets, transportation application of fuel cells still appears to have the longest timeline to commercialisation (at least the year 2020 by some estimations). They also require perhaps the most complex integration of a fuel cell system. As described by the California Fuel Cell Partnership

(CaFCP), "a fuel cell engine is the complete set of components that integrate with a fuel cell to form a small energy plant that creates electricity to power a vehicle's wheels."

The well known benefits of H2 powered FCVs boil down to near zero pollution, except for exhaust water vapor, and zero production of greenhouse gases due to a lack of combustion and increased energy efficiencies. FCVs can also contribute to reducing noise pollution. At their most productive, FCVs could be used as backup power systems for residential or business electricity.

CaFCP identifies four major goals that must be accomplished to commercialise FCVs. The first certainly involves safety in proving the durability and reliability of the fuel cell. Second, the cost of the fuel cell systems must be comparable to today's internal combustion engines. Third, depending on fuel choice, an alternate fuel infrastructure must be made available and convenient. Lastly, public acceptance must be secured in order to create demand for this technology. So the cycle for fuel cell vehicle commercialisation incorporates safety from start to finish.

In 1999, "Safety Issues with H2 as a Vehicle Fuel," by Lee Cadwallader and Stephen Herring was published by the Idaho National Engineering and Environmental Laboratory (INEEL) in Idaho Falls, ID, USA for the US Department of Energy (DOE). A preliminary hazards list was compiled for pressure, chemical, temperature, materials, and toxicological issues for gaseous, liquid, slush, liquid organic hydride, and solid metallic hydride.

The report concludes that H2 leakage, combustion potential, and compressed and cryogenic gas containment issues are the primary FCV safety concerns. A review in the report of international operating experiences with both internal combustion and fuel cell engines using H2 back to 1976 reveals examples of H2-powered vehicles that survived rollovers and other crash scenarios with no H2 leakage. So the report authors believe that "while there are still mishaps with H2 in various industries, no safety issues are forseen that would warrant cessation of H2 use as a vehicle fuel."

Now five years after the INEEL report, John Kolts, Manager of H2 Programs at Argonne National Labs, comments that "Our overall safety concerns have effectively remained the same, although we know more and have better data from these additional years of hands-on H2 experience in test FCVs to a much higher degree of safety and confidence." In his opinion, the use of H2 as an energy carrier in FCVs deserves the same, but not inordinately more attention to safety as with other vehicle fuels and vehicle propulsion systems. "The potential safety issues for H2 are different," he admits, "and these differences must be factored into design with absolute rigor, as required for any safe and reliable vehicle fuel system." **(13)**

Other resources that examine H2 safety within vehicle fuel cell systems include The Emergency Response Guide from the CaFCP and Module 6 of Hydrogen Fuel Cell Engines and Related Technologies, prepared as part of the advanced automotive technologies curriculum at the College of the Desert in Palm Desert, CA, USA. Perhaps

the most detailed analysis of electrochemical, process and electrical systems within an FCV can be found in the Society of Automotive Engineers' (SAE) J2578, "Recommended Practice for General Fuel Cell Vehicle Safety," published in 2002. The purpose of the recommended practice "is to provide introductory mechanical and electrical system safety guidelines for consideration when designing fuel cell vehicles for use on public roadways." Some 73 existing codes and standards from six different international code bodies were referenced to form this document (and can be examined at the Hydrogen Codes and Standards portal.) **(14)**

From electromagnetic capability through voltage control, fuel storage, leak sensor systems, fluid hazards, ignition sources, ventilation, encapsulation, automatic fail safe shutdown, purges, suppressants and surges, to a vehicle's towing and crash design criteria, J2578 offers what seems an all-encompassing review of fuel cell systems for vehicles. One wonders how much thicker such a practices document would be for an internal combustion engine, with its significantly greater number of moving parts, total components, higher operating temperatures, and actual combustion requirements.

Automakers and FCV safety

"We test all our FCV products relentlessly, as an integrated system," states Andreas Schell, Senior Manager, Advanced Vehicle Engineering for the Chrysler Group in Auburn Hills, MI, USA, "just as we do with our internal combustion engines. Fuel cell vehicles are still in research and development, but our F-Cell vehicles are built using the Mercedes A-Class platform, which is a proven structure. This is also true of our Dodge Fuel Cell Sprinter van and the Mercedes fuel cell powered Citaro buses. We put safety first, and are working [through both the CaFCP and the US DOE's Controlled H2 Fleet and Infrastructure Demonstration and Validation project] to help increase education and public awareness of the long-term benefits of FCVs and a H2 economy." **(15)**

Another FCV, Honda's FCX, can boast of being the first to receive certification from the US government (including the Environmental Protection Agency, Department of Transportation and others) and the California Air Resources Board as meeting all applicable standards as a zero emissions vehicle and as a Tier 2-Bin 1 national low emissions vehicle (2002). Honda was also the first to begin 55 mph crash testing on its FCX, and reports no H2 leakage occurred in that testing from the high pressure fuel tanks (Fuel Cell Today, April 25, 2002). Stephen Ellis, Manager of Fuel Cell Vehicles, Sales and Marketing for American Honda Motor Company, claims the FCX draws on the company's excellent expertise with natural gas vehicles, in particular the Honda Civic GX. "We had eight years of production experience with the Civic GX model fueled with natural gas, and encountered no leakage or other incidents of any kind."

The 2005 FCX is now equipped with Honda's own fuel cell stack; from 2002 to 2004, FCX vehicles used Ballard Power Systems' Mark 900 series stacks. The Honda stack reduces total components by 50% and doubles the output density. Honda began testing the stack in April of 2004.

This latest FCV from Honda continues safety features first built into the 2003 FCX and based on the EV Plus platform. The features include isolating the cabin from both the fuel cell and the high-pressure fuel tanks, by moving them into the vehicle's floor. Ellis points out that besides the safety benefits, this relocation "creates mass centralisation with the heavy load of these components to positively affect handling performance." The space was previously taken up by the 450kg of nickel metal hydride batteries that powered the EV Plus. Honda FCX engineering team leader, Yozo Kami, who designed the suspension for Honda's Accord, has worked on that feature for the FCX as well. In Ellis's view, "This gives the FCX tremendous handling performance for a limited production FCV."

Figure 5. 2004 HONDA FCX Onboard Safety Features

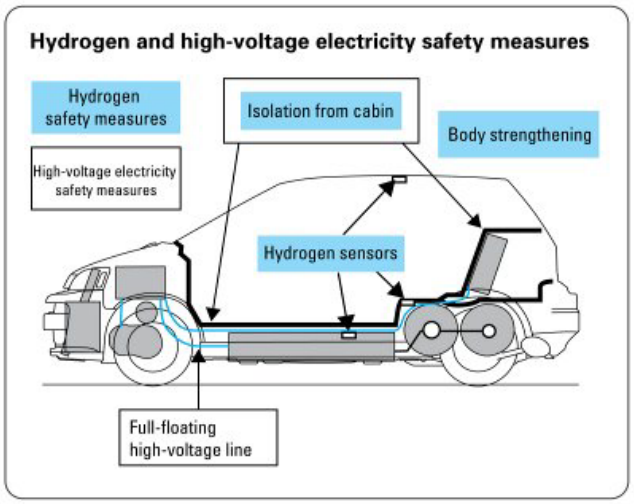

Source: Courtesy of Honda - http://www.hondanews.com/

Ellis goes on to say that H2 sensors are located throughout the FCX to provide H2 leak detection. Forced ventilation and automatic shut off systems close the electric, in-tank solenoid valve on the fuel tank, stopping fuel supply to the H2 supply lines should a leak occur. The high voltage lines are electrically isolated and clearly marked in bright orange. In the event of a collision, a contact mechanism shuts down the source power line. For fueling, a check valve assures a good H2 seal with no evaporative loss. To prevent an errant connection of filler nozzles with the wrong filler pressure or the mixing in of other gases, the fill nozzle is unique to H2. A grounding system rids the vehicle of static electricity before fueling, and the double lid refueling door design locates the refueling lid release inside the grounding lid.

During a H2 fueling station demonstration of the FCX with fire department officers present, one fire chief was particularly impressed by the fact that the FCX fuel door interlock prevents the car from going into gear during fueling. "This reduces any chance of 'drive offs,'" says Ellis, "such as you see with gasoline fueling where drivers pull away with the fueling nozzle still in the gas tank. These incidents can cause fire hazards that can't happen with the FCX design."

The energy-absorbing body structure of the FCX also exhibits an outstanding safety level in protecting the fuel cell system and high-pressure fuel tanks from impacts and body deformation in a crash. Again, Yozo Kami's input to the vehicle's structural configuration was crucial; he directed use of a cross member to the side sills and outriggers that bolster a large cross section extending from the front frame to the floor frame. This structure reduces impact force on the cabin area in a frontal collision. Two-stage construction of the rear frame and subframe absorbs rear collision impact, in particular restraining impact force upon the high pressure H2 tanks. **(16)**

Figure 6. 2004 Honda FCX rear frame with added protection for hydrogen fuel tanks

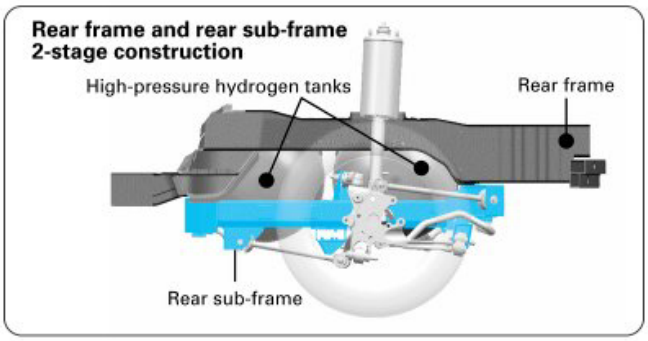

Source: Courtesy of Honda - http://www.hondanews.com

Alan Earls reports on safety testing by several other automakers in his 2002 article, "Fuel Cell Vehicles: Closer Than You Think." He says that "even without safety standards specific to motor vehicle fuel cells, Ford Motor Company has implemented many safety systems in its demonstration FCVs. The H2-detection systems consists of [multiple] sensors in the trunk, under the hood and in the passenger compartment. Eight small fans continuously vent the vehicle during operation and fueling. [Another automaker], BMW conducted numerous crash tests to see what would happen if the H2 tank on its vehicles was punctured or damaged. Its engineers report the liquid H2 dissipated harmlessly into the air."

Ballard's Rosenberg thinks it's important to be aware that the major automakers have been working on FCV demonstration vehicles for at least a decade. "There are multiple iterations of vehicles now being operated in fleets, but many more that have never been seen were crash tested, run on test tracks and used in refueling testing in house by the OEMs. So those now on the road under actual fleet conditions have already gone through an intensive level of testing and review. The auto companies in general are ultraconservative, they can't afford a safety mark on their record. They never would have taken the step into field trials if the demonstration FCVs were not safe." He suggests that between 2008 to 2012, several thousand fleet vehicles will further demonstrate reliability and safety, and this will add to consumer confidence about FCVs.

Taking on the fuel tanks

"It's incorrrect to assume that H2 leakage issues always occur with the H2 tanks," states Alan Niedzwiecki, CEO of Quantum Fuel Systems Technologies Worldwide (QTWW), Irvine, CA, USA. Quantum's trademarked TriShield all-composite tanks are in testing by most of the automakers involved in the CaFCP. "Leakage will always be an issue with H2, as the H2 molecule is so small and therefore difficult to contain. The seals, pressure regulators, fuel lines and connectors may also represent leakage points. My view is that we will see demonstration and field test FCVs coming off the road occasionally as we address the challenges of these new technologies. It will take some time to refine the entire fuel system. But it's much better to pull the small number of test vehicles off the road before we have hundreds or thousands of commercial FCVs in use."

Figure 7. Layout of the QTWW TriShield tank

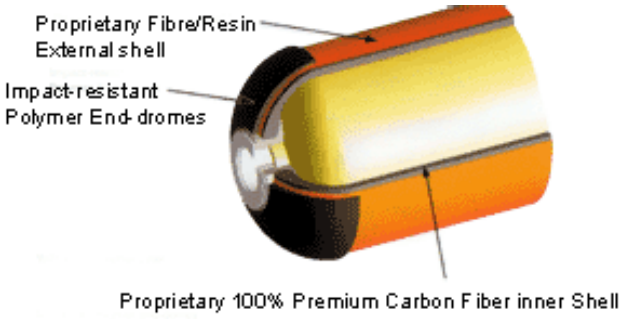

Source: Courtesy of Quantum Fuel Systems Technologies Worldwide

QTWW, the only company to achieve government certification on 700 bar (10,000 psi) H2 fuel storage systems, regularly puts its 350 and 700 bar tanks through more rigorous testing than a vehicle would likely ever encounter. One test involves gunfire with 30- and 50-caliber armor piercing ammunition to penetrate the tanks and demonstrate safe venting. Pressure relief and flow valves integral to the tank design keep the H2 in the tank rather than throughout the fuel line, and also maintain appropriate temperature and pressure. **(17a)**

Another leading high pressure cylinder OEM, Dynetek Industries, based in Calgary, Canada, has its trademarked DyneCell composite cylinders onboard a number of test FCVs. The Dynetek cylinders feature a seamless aluminum liner with carbon fiber/epoxy (composite) overwrap. "In case of impact, the weakest point in an FCV's fuel system is the plumbing," states Don Fraser, Business Manager, "not in the robust cylinder such as our DyneCell. Plus we've designed in-cylinder solenoid regulators to keep all the pressure within the cylinder. If the fuel lines are sheared off, our shut-off valves and excess flow valves prevent H2 from exiting the fuel system. Should the H2 vehicle catch fire, the pressure relief valve releases the H2 to rapidly dissipate into the air. We have a tremendous and successful history with high pressure natural gas cylinders, and H2

cylinders are similar in their construction for safety and performance. What we've learned is that in vehicle crash scenarios, the entire vehicle may be destroyed but the cylinder survives."

Fraser mentions that an H2-powered bus fleet outfitted with Dynetek fuel cylinders has been operating in Germany for over 300,000 km, "and we've had virtually no problems with them." **(17)**

Perhaps the ultimate comparative vehicle fuel leak test to date was conducted at the University of Miami by Associate Professor Michael Swain, in 2001. A single failure mode leak and fuel ignition were created with a puncture in the fuel line of a gasoline fueled vehicle and at the pressure release device in a H2 fueled vehicle to allow all the H2 in the tank to escape. (Built-in safety devices were overridden.)

Swain made a video of the test results, which show that the H2-powered vehicle suffered no damage due to ignition of the H2, whereas the gasoline-powered vehicle was severely damaged. **(18)** A source for this Fuel Cell Today safety report made the comment that, "From a safety standpoint, when you see Swain's video and the way the gasoline fueled car goes up in flames while the H2 fuel fire snuffs within several minutes, which car would you want to drive?"

A number of SAE recommended practices have been formulated regarding the safe design and operation of compressed H2 in vehicles:
* SAE J2579 "Recommended Practice for Hazardous Fluid Systems in Fuel Cell Vehicles (published),
* SAE J2600 "Compressed H2 Vehicle Fueling Connection Devices" (published), and
* SAE J2601 "Compressed H2 Vehicle Fueling Communication Devices" (published).
(19)

A new standard called HGV-2 (Hydrogen Gas Vehicle) is under review by the CSA for hydrogen specific cylinders. **(20).**

Question of infrastructure

Obviously FCVs in widespread use will be parked both indoors and outdoors and refueled at local stations just as gasoline vehicles are now. Automakers, fuel suppliers, fuel cell stack/component suppliers and companies specialising in storage and H2 generation/equipment technology all have a stake in analysing safety risks in these scenarios, as well as onboard the vehicle itself. In August, 2004, the CaFCP released a study on safety that it commissioned from Parsons Brinkerhoff, a global planning and management firm. The study examines risks with FCVs in a multistory public parking garage, a residential garage, and at a repair and maintenance facility.

The purpose of the report, based on computational fluid dynamics (developed by Dr. Michael Swain) and applicable conventional building codes, is twofold. First, to provide general information to facility designers in developing facility plans, and second, to

identify some of the important H2 leak scenarios that might be encountered with FCVs. In compiling the report, government and industry experts were consulted, along with local fire officials.

Limitations of different buildings relating to ventilation systems, geometry, and H2 leak rate had to be taken into account for the study. This is also true for the onboard safety features of the vehicle equipment assumed. The results depend upon vehicle safety systems limiting the H2 leak rate to 20 cubic feet per metre (CFM) when the fuel cell engine is on, and H2 sensors that are capable of dependably detecting 1% levels of H2 near a leak source. H2 sensors identified for the vehicle could detect leaks in situations with low ventilation. None of the sources of ignition around the vehicles being modeled were included in the results.General industry practice and understanding holds that hydrogen cannot ignite unless it reaches a concentration level of at least 4.1% in air.

Figure 8. Two computer-generated models of a generalized fuel cell vehicle in a garage, and the H2 origination and dissipation rates in the unlikely event of a leak.

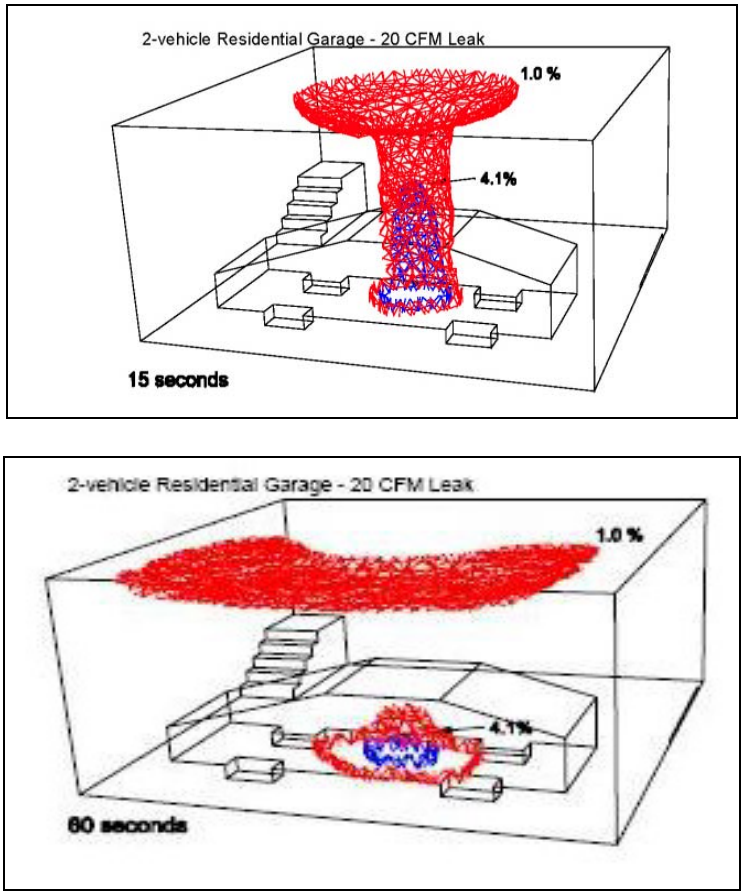

Source: Courtesy of California Fuel Cell Partnership

Further validation and demonstrations are needed, including fueling in the facilities, but conclusions based on the caveats of this study suggest, of the scenarios examined, no facility modifications were required to accommodate FCVs using a H2 energy carrier. Comparison between the volume of possible H2 that could be released, including a vehicle's entire tank, and the volume of any of the facilities considered indicated that the possibility of a large concentration of H2 in a plume with relevant dangers to humans was very small. Essentially the CFD modeling found that any H2 plume was confined to within two feet of the FCV, and normal airflow diluted the H2 to less than flammable concentration levels. In the case of low ventilation rates, the CFD model results showed the H2 plume spreading to the wheel wells where it could be detected if the FCV were equipped with functional H2 sensors.

The report also concludes: "Automakers will need to consider other risk scenarios when developing safety systems for vehicles. The reliability of H2 sensors onboard the vehicle, their locations and possible impact by severe weather, their functional reliability and calibration requirements, and system response dependability for dealing with exterior eventualities such as those that exist between different parking situations will need to be considered. In the absence of robust safety systems that shut off the flow of H2 in the event of a leak, automakers might consider strategies that limit the flow of H2 when the vehicle is not moving. This approach may be especially effective in residential garages where airflow is normally limited. Alternatively, more extensive evaluations of potential ignition sources in residential garages must be given serious consideration before any recommended safety precaution protocol can be prescribed." **(21)**

The month before the CaFCP facility and garage report, a document from the US National Highway Traffic Safety Administration (NHTSA) was made public, titled "NHTSA's Four Year Plan for Hydrogen, Fuel Cell and Alternative Fuel Vehicle Safety Research." The report includes five tables that frame 21 different safety performance issues to be assessed over a four-year timeline, involving H2, fuel cell and hybrid vehicles, and subsystems. Within this safety initiative proposed by Joseph Kanianthra, Associate Administrator for Vehicle Safety Research, the NHTSA intends to conduct risk assessment studies of H2-fueled FCVs to quantify potential failures that could indicate unsafe conditions. NHTSA will also work with its international counterparts to determine the content of regulations pertaining to fuel cell and internal combustion engines that will use H2. The agency expects to participate in the development of applicable codes and standards, public outreach and safety information collection. The latter will include collecting real world data from automakers with FCV demonstration programs, as well as the US DOE, US Department of Transportation (DOT), and the CaFCP.

Within its vehicle safety research, this four-year plan will evaluate FCV fuel containment and delivery systems, conduct refueling system performance testing, and perform crash testing. Hydrogen leakage will be examined while FCVs are parked. Fire and road hazard exposure tests will be undertaken, and incident management examined. An important element of this initiative also includes working with international agencies for the harmonisation of vehicle regulations.

Over the past five years, one of the crucial issues that has emerged at the core of achieving a hydrogen economy with FCVs is the need for a global infrastructure of fueling stations. Concepts continue to fly thick and fast as to the best way to create this infrastructure (will entirely new stations be required, can existing stations be adapted, how fast can codes and standards bodies and OEMs conduct the testing necessary to be sure H2 is safe in these stations?). Also at question is the expense of a hydrogen infrastructure. Some believe billions will be have to be spent. (Others believe there are technology answers that will not require entirely new stations to be built, but provide the means to adapt existing stations.)A recent estimate from Bernard Frois, Director of Energy, Transport, Environment and Natural Resources for the French Ministry of Research and New Technologies puts the cost of such an infrastructure at one to five trillion dollars. And at this point in the FCV aspect of the hydrogen economy, there are more refueling stations than vehicles to use them (recalling the metaphor of "which comes first, the chicken or the egg?"

Moreover, in the last two years major, "hydrogen highway," "hydrogen corridor," and "hydrogen village partnership" initiatives began in the US, Canada, Europe, Iceland, Japan, and Norway. As with each FCV, each of these fueling stations, and within networks of stations, will go through a stringent safety assessment and risk management siting review that must encompass cooperation from relevant jurisdictional bodies.

Jim Hansel, Senior Engineering Associate for Process Safety for Air Products, comments on the importance of working with local authorities and emergency responders when siting H2 fueling stations. "At every fueling installation in which Air Products is involved, we've worked with the site host, and that process may include meetings, training sessions and site visits. The safety issues with H2 are comparable to other fuels, but the differences are sufficient to warrant different management and heightened communication with all stakeholders. We are proactive in communicating with these stakeholders on H2 issues, and have participated and provided input on the writing of codes and standards for inspectors. We believe our decades of H2 experience are helpful in crafting the safety success of this emerging area." Air Products is headquartered in Lehigh Valley, PA, USA. **(22)**

Air Products, Shell and General Motors are participating in a joint venture involving the first H2 station in the United States opened as part of an existing retail gasoline site (Washington, D.C., November 10, 2004). In a presentation at the Fuel Cell Seminar 2004, Air Product's David Guro, Project Manager, Future Energy Solutions, listed the permitting agencies involved with a site such as the one in Washington: planning/zoning, building and safety, public works, electrical inspections, fire department, and traffic.

His presentation also listed the questions partners in such ventures must determine:

A) What does the customer want?
B) How many vehicles will be using the station?
C) How often will these vehicles fill up?
D) Where is the station going to be located?
E) What are the safety codes and standards for this location and these vehicles?

F) Where will we get the H2 for this station?
G) How will the H2 be distributed at this station?
H) What will the H2 fueling station look like?
I) What will the H2 cost?

In particular, Guro's presentation cites the National Fire Protection Agency's (NFPA) codes as important in determining appropriate distances of the H2 fueling equipment from existing equipment, as well as the electrical classified areas.

The second half of this report, which completes the overview of codes and standards, is published separately at the Fuel Cell Today website.

Additional resources on fuel cell and H2 safety

For more information on the companies, organisations and agencies mentioned in this report, here follows the contact data:

(1) www.esdjournal.com/articles/hindenbrg/hindburg.htm
(2) www.hydrogenus.com/advocate/ad22zepp.htm
(3) www.HydrogenAssociation.org
(4) www.utcfuelcells.com
(5) www.plugpower.com
(5a) www.apolloenergysystems.com
(6) www.ballard.com
(7) www.fce.com
(8) www.siemens.com
(9) www.sofco-efs.com
(10) www.IdaTech.com
(11) www.millenniumcell.com
(12) www.safehydrogen.com
(13) www.INEL.gov
(14) http://HCSP.ANSI.ORG
(15) www.dcx.com
(16) www.honda.com
(17) www.dynetek.com
(17a) www.qtww.com
(18) www.bellona.no/en/energy/hydrogen/report_6-2002/22966.html
(19) www.sae.org
(20) www.csa.org
(21) www.CaFCP.com/news_releases-04/2004_08_16_FacilityStudy.html

(22) www.airproducts.com

Other resources of value regarding safety training, codes and standards, fuel cell vehicles, and H2 safety include:

* Codes and Standards Development Organisations and Roles, downloadable templates at www.eere.energy.gov/hydrogenandfuelcells/codes/standards_organization.html?print

* 2004 Annual Progress Report, U.S. DOE Hydrogen, Fuel Cells and Infrastructure Technologies Program (see chapter six, "Safety and Codes and Standards," www.eere.energy.gov/hydrogenandfuelcells/annual_report04_safety.html?print

* Hydrogen Posture Plan and Integrated Research, Development and Demonstration Plan, U.S. DOE, February 2004, www.eere.energy.gov/hydrogenandfuelcells/posture_plan04.html

* "Fuel Cell Vehicles: Closer Than You Think," by Alan R. Earls, NFPA Journal Online, www.hydrogensafety.info/articles/02-dec-03.asp

* Fuel Cell Catalyst newsletter, "A Fuel Cell Codes and Standards Primer," Summer 2001; "Codes and Standards Update," Summer 2003. Published by the U.S. Fuel Cell Council, National Energy Technology Laboratory, and National Fuel Cell Research Center, www.usfcc.com, click on newsletters.

* Fuel Cell Summit, quarterly newsletter from the U.S. DOE and PNNL, www.pnl.gov/fuelcells/newsletter.

* "Is 'Hydrogen Highway' The Answer?" San Diego Tribune, Nov. 22, 2004, www.signonsandiego.com/news/science/20041122-9999-1n22hydrogen.html

* Sourcebook of Hydrogen Applications, by D. Robert Hay, Pierre Benard and Vasile Mustafa. TISEC Inc., www.tisec.com/products/hydrogen_sourcebook/hydrogen_sourcebook.htm

* Safety Standard for Hydrogen and Hydrogen Systems, U.S. National Aerospace Agency, www.hq.nasa.gov/office/codeq/doctree/871916.pdf

* Hydrogen Fuel Cell Engines and Related Technologies, technical report as part of advanced technologies curriculum at College of the Desert Energy Technology Training Center, available from National Technical Information Service, www.ntis.gov/search/product.asp?ABBR=PB2003100184&starDB=GRAHIST

* Emergency Response Guide, Fuel Cell Vehicles and Hydrogen Fueling Stations, August 2004, California Fuel Cell Partnership, www.CaFCP.com, Resources section.

* "Support Facilities for Hydrogen-Fueled Vehicles, Conceptual Design and Cost Analysis Study," CaFCP, www.CaFCP.org/news_releases-04/2004_08_16_FacilityStudy.html

* Guidance for Safety Aspects of Proposed Hydrogen Projects, US Department of Energy, www.eere.energy.gov/hydrogenandfuelcells/pdfs/safety_guidance.pdf

* "2005 National Electrical Code on CD-ROM," BookMark, Inc., www.bookmarki.com/index.asp?PageAction=VIEWPROD&ProdID=2085

* "Industrial market: Canadian firms demo fuel cell powered forklifts," May 2004, Fuel Cell Industry Report online, www.FcellReport.com.

* "Infrastructure: team approach to control, safety and education critical to passing H2 installation inspections," September 2004, Fuel Cell Industry Report online, www.FcellReport.com

* NFPA 853: Standard for the Installation of Stationary Fuel Cell Power Plants (2003), www.nfpa.org/aboutthecodes/AboutTheCodes.asp?DocNum=853

* "The Transportation Fuel Cell Supply Chain," December 2004 study by Frost and Sullivan, www.abiresearch.com/reports/AFSC.html.

* Hydrogen Safety Report, free monthly online newsletter, National Hydrogen Association, Washington, DC, USA, www.HydrogenSafety.info.

* "Hydrogen and Tort Law: Liability Concerns Are Not a Bar to a Hydrogen Economy," Energy Law Journal, Vol. 25, No. 2, pp. 385-401, William S. Hein Company, http://www.ebanet.org/journal.php?PHPSESSID=7b4b719e8bd719e6f26f684b141de465.

* Worldwide Hydrogen Fueling Centers, map of installations and vehicle demonstrations, U.S. Fuel Cell Council, www.fuelcells.org,

* "The Hydrogen Economy -- Opportunities, Costs, Barriers and R&D Needs." from the U.S. National Research Council's Committee on Alternatives and Strategies for Future H2 Production and Use, www.nap.edu.

ABOUT THE AUTHOR: Vicki P. McConnell has been the Editor of Fuel Cell Industry Report monthly newsletter since its inception five years ago. Her career as a Technical Editor extends over 25 years, especially in polymeric and composite materials, design, manufacturing, and applications technology, and advanced vehicles as a contributing writer for more than a dozen international publications.